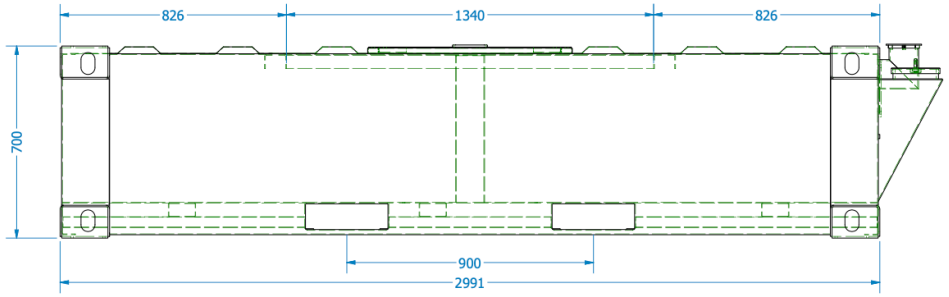

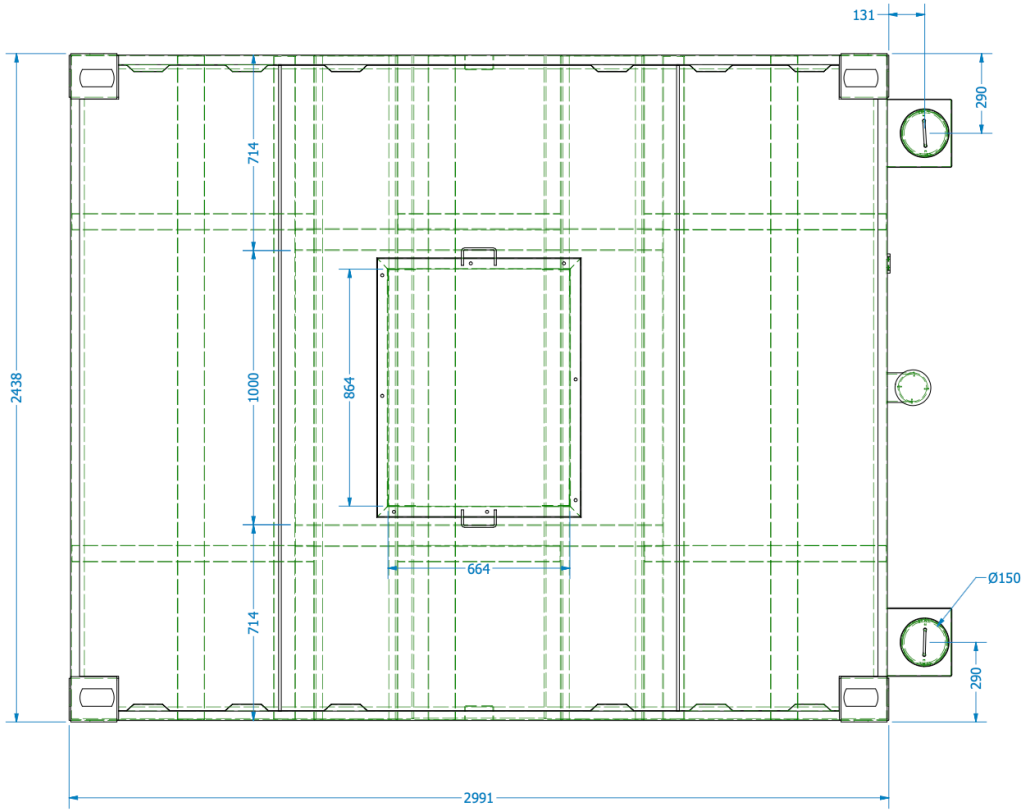

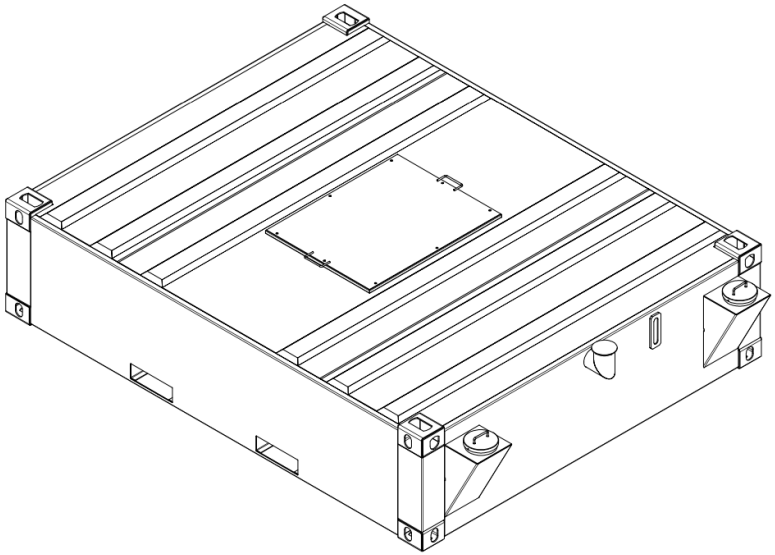

Mechanic International
Your specialist in security locks and containers